REV.	DESCRIPTION OF CHANGE	INITIALS	DATE
0	INITIAL ISSUE		
1	REPLACE LOCKNUTS WITH HELICOILS	RR	22/05/08
2	ADDED FINISH SPEC	RR	29/07/08

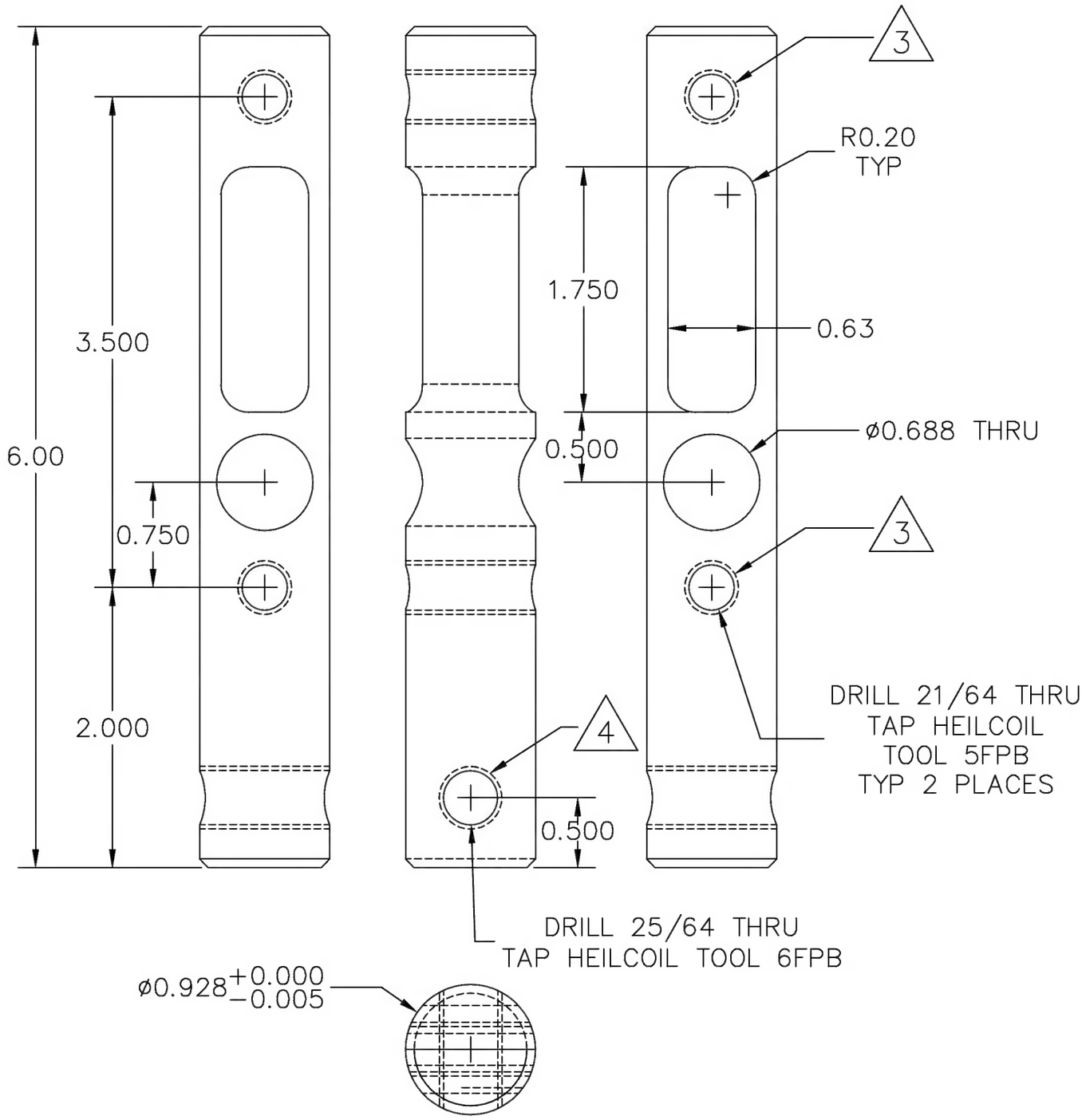

NOTES

1. REMOVE ALL BURRS AND BREAK SHARP EDGES.
2. ITEM 2 "PLUG STN 131" TO BE CLEANED AND ALODINED PER S3001 PRIOR TO ASSEMBLY.

3 INSERT ITEM 03 (HELICOIL) PER HELICOIL INSTALLATION INSTRUCTIONS – WITH LOCTITE2440.

4 INSERT ITEM 04 (HELICOIL) PER HELICOIL INSTALLATION INSTRUCTIONS – WITH LOCTITE2440.

QTY	PART NO.	ITEM	DESCRIPTION	MATERIAL	MATERIAL SPEC	STOCK SIZE
2	3591–6CN562	04	HELICOIL 3/8–24 LOCKING			
2	3591–5CN625	03	HELICOIL 5/16–24 LOCKING			
1	75826–02	02	PLUG STN 131	6061–T6 ALUM BAR	ASM–QQ–A–200/8	1.0 DIA
	75826–01	01	ASSEMBLY, PLUG STN 131			

LIST OF MATERIALS

-- NOTICE --
THIS DRAWING CONTAINS INFORMATION AND DATA WHICH IS PROPRIETARY TO AERO DESIGN LTD. THIS DRAWING, OR ANY PORTION THEREOF, MAY NOT BE REPRODUCED, COPIED, OR DUPLICATED IN ANY MANNER, NOR USED FOR MANUFACTURING WITHOUT THE WRITTEN CONSENT OF AERO DESIGN LTD. BY ACCEPTING THIS DRAWING FOR REFERENCE, THE RECIPIENT AGREES TO HOLD AERO DESIGN LTD. HARMLESS FROM THE USE, OR MISUSE, OF THIS DRAWING OR THE INFORMATION CONTAINED THEREON.

APPROVALS		DATE
DRAWN:	R. RATHWELL	22/04/08
CHECKED:	E. BURGOIN	

UNLESS OTHERWISE SPECIFIED DIMENSIONS ARE IN INCHES.
TOLERANCES ON:

DECIMALS		ANGLES
X.XXX	±0.010	±1/2°
X.XX	±0.03	
X.X	±0.1	

AERO DESIGN LTD.
CONSULTING ENGINEERS, TRANSPORT CANADA APPROVALS, DAR 290M
2013 – 39TH AVENUE N.E., CALGARY, ALBERTA, CANADA, T2E 6R7
tel: (403) 250–8027 fax: (403) 250–8333 www.aerodesign.ca

BELL 212, 412, 205A–1, 205B
RAPPEL MOUNT PROVISION
ASSEMBLY, PLUG, STN 131

SCALE 1 : 1	DWG. SIZE	DWG. NO.	REV.
SHEET 1 OF 1	LGL	75826	2